Introduction

Introduction

The HP Remote System Controller and HP Integrated Remote System Controller are remote management peripherals meant to provide out-of-band management to Z Desktop Workstations and select HP Engage Retail Systems. The two different brand names refer to two different form factors of essentially the same product, but with some important differences between the two that are further described later in this document. The HP Remote System Controller is an external device, and the HP Integrated Remote System Controller is an internal PCIe device. Both are compatible with most compute devices[1] as an IP KVM[2] (including Macs) as long as the said compute device has available USB type-A ports and display outputs, but the HP Remote System Controller (external device) is recommended for use with other compute devices.

Although they are both compatible with other compute devices, users achieve a significantly more advanced feature set when pairing the HP Remote System Controller or HP Integrated Remote System Controller with Z by HP Desktop Workstation and select HP Engage Retail Systems.

There are various software methods to interface with the HP Remote System Controller and HP Integrated Remote System Controller to enable remote management of entire fleets of remote compute devices. These software methods are described briefly in the 'Software Overview' section of this document, but this document focuses primarily on the hardware devices.

NOTE: When this document refers to both the HP Remote System Controller and HP Integrated Remote System Controller, it may combine the two as such: HP (Integrated) Remote System Controller. Remote System Controller may be abbreviated as RSC.

[1] HP Integrated Remote System Controller not compatible with Z2 Mini platforms and not recommended for non-Z devices. HP service and support not available for non-Z devices. Full suite of hardware alerts available with select Z desktop workstations. See datasheet for details.

[2] IP KVM refers to the ability to remotely interface with the host machine with keyboard, monitor and mouse control over a network.

[3] Only the Integrated Remote System Controller has been qualified with select HP Engage Retail Systems

HP Remote System Controller AMO and CTO Offerings

The HP Remote System Controller and HP Integrated Remote System Controller are both available as configure to order (CTO) options on select Z by HP Desktop Workstations and are also available for purchase as an aftermarket option (AMO). See below for which platforms offer CTO options and for a complete list of the after-market options.

CTO Availability:

- HP Z2 Mini G1i (external Remote System Controller only)
- HP Z2 Mini G1a (external Remote System Controller only)
- HP Z2 Small Form Factor G1i
- HP Z2 Tower G1i
- HP Z4 Rack G5
- HP Z6A G5
- HP Z8 Fury G5
- HP Z2 Mini G9 (Remote System Controller only, HP Integrated Remote System Controller not compatible)
- HP Z2 Small Form Factor G9
- HP Z2 Tower G9
- HP ZCentral 4R
- HP Z4 G5
- HP Z6 G5
- HP Z8 G5
- HP Engage Flex Pro G2
- HP Engage Flex Pro C G2
- HP Z4 G6i

Introduction

- HP Z8 Fury

NOTE: CTO availability subject to change.

AMO Offerings:

NOTE: For more information on each of the AMO kits below, see the "After Market Option Kits" part of the 'Overview' section in this document.

Description	Part Number	Use Case
HP Remote System Controller	7K6D7AA	AMO kit for use with the following platforms: - Z2 G9 or later - Z4, Z6, Z8 G4 or later - ZCentral 4R or later *For use with the ZCentral 4R, Z4 G4, Z6 G4, and Z8 G4, the HP Z4/Z6/Z8 G4 / ZCentral 4R Remote System Controller Cable Adapter (7K6E5AA) is required
HP Remote System Controller for Universal KVM	7K7N2AA	AMO kit for non-Z by HP compute devices and Z by HP platforms prior to the systems listed for 7K6D7AA HP ZGX Nano and HP ZGX Fury G1n AI Station
HP Z2 Mini Remote System Controller	7K6E4AA	AMO kit for use specifically with the HP Z2 Mini G9, Z2 Mini G1i and Z2 Mini G1a
HP Integrated Remote System Controller	7K6D9AA	AMO kit for the Integrated Remote System Controller for use with the following platforms: - Z2 G9 or later (excluding the Z2 Mini) - Z4, Z6, Z8 G4 or later - ZCentral 4R or later *For use with the ZCentral 4R, Z4 G4, Z6 G4, and Z8 G4, the HP Z4/Z6/Z8 G4 / ZCentral 4R Remote System Controller Cable Adapter (7K6E5AA) is required
HP Remote System Controller Main Board Adapter	7K6D8AA	AMO kit for the Z Desktop Power and Signal Interface for allowing external power button enablement and BIOS access to the following platforms: - Z2 G9 or later (excluding the Z2 Mini) - Z4, Z6, Z8 G4 or later - ZCentral 4R or later *This adapter is already included with 7K6D7AA. This kit does not include the HP Remote System Controller. This kit is intended for customers who want to share a single Remote System Controller between several devices
HP Z4/Z6/Z8 G4 / ZCentral 4R Remote System Controller Cable Adapter	7K6E5AA	AMO kit containing the adapter required to use the Remote System Controller with the ZCentral 4R, Z4 G4, Z6 G4, and Z8 G4

Introduction

HP Integrated Flex Pro Remote System Controller	9B141AA	AMO kit containing the integrated Remote System Controller for use with the HP Engage Flex Pro G2 and HP Engage Flex Pro C G2

AMO Decoder by Platform:

I Am Using A...	Needed AMO Kit
• HP Z2 Small Form Factor G1i, HP Z2 Tower G1 • HP Z2 Mini G1i, HP Z2 Mini G1a • HP Z2 Small Form Factor G9 • HP Z2 Tower G9 • HP Z4 G5 • HP Z4 Rack G5 • HP Z6 G5 • HP Z6 G5 A • HP Z8 G5 • HP Z8 Fury G5 • Z4 G6i • Z8 Fury G6i	• HP Remote System Controller (7K6D7AA) for those who want the external form factor • HP Integrated Remote System Controller (7K6D9AA) for those who want the internal form factor • HP Remote System Controller Main Board Adapter (7K6D8AA) for those who just need to add the proprietary 10-pin Z Desktop Power and Signal Interface to their systems. This kit does not include the HP Remote System Controller itself. This adapter is already included with 7K6D7AA
• HP Z2 Mini G9	• HP Z2 Mini Remote System Controller (7K6E4AA) for those who want the external form factor. The internal form factor is not supported on the Z2 Mini G9

• HP Z4 G4
• HP Z6 G4
• HP Z8 G4
• HP ZCentral 4R
	• First purchase the HP Z4/Z6/Z8 G4 / ZCentral 4R Remote System Controller Cable Adapter (7K6E5AA) to ensure you have the right adapter and then add either of the below depending on which form factor is desired:
	  ○ HP Remote System Controller (7K6D7AA) for those who want the external form factor
	  ○ HP Integrated Remote System Controller (7K6D9AA) for those who want the internal form factor

• HP Engage Flex Pro G2 • HP Engage Flex Pro C G2	• HP Integrated Flex Pro Remote System Controller (9B141AA)
• Z by HP Workstation not listed above • Workstation or PC from another vendor • Mac • Server • HP ZGX Nano • HP ZGX Fury G1n AI Station	• HP Remote System Controller for Universal KVM (7K7N2AA). This AMO kit includes all of the necessary components for using the HP Remote System Controller with a system that doesn't support the proprietary 10-pin Z Desktop Power and Signal Interface.

HP Remote System Controller

Introduction

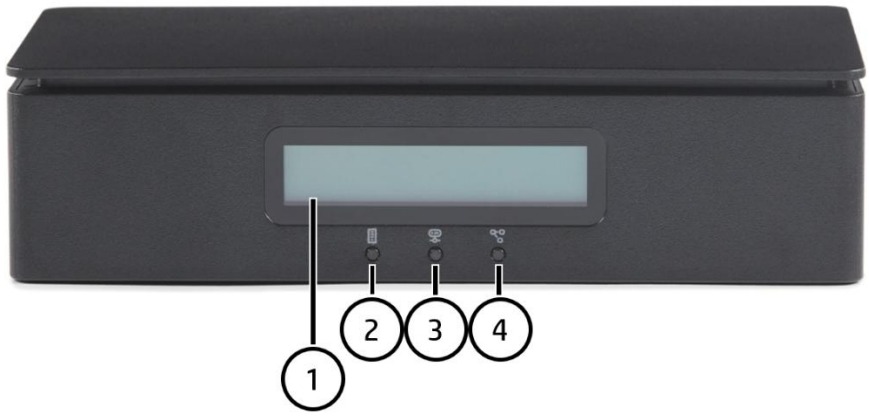

Front View

1. LCD Screen
2. Host Status LED
3. Remote System Controller status LED
4. Remote Connection status LED



Left View (Host-Facing Ports)

1. Power and Signal Interface (compatible with Z desktops only)
2. Mini DisplayPort™ for graphics input
3. USB for Mouse/Keyboard/Mass Storage Emulation
4. 1GbE Network for Pass Through Ethernet

Introduction



Right View (Network-Facing Ports)

1. Kensington Lock Mount
2. 12V DC Power Jack with AC/DC adapter (not needed with Z desktops)
3. 1GbE Network for Remote Connection

Note: Factory Reset Button is located on the bottom of the Remote System Controller.

HP Remote System Controller	
Product Part Numbers	7K6D7AA/7K7N2AA/7K6E4AA (see HP Remote System Controller AMO and CTO Offerings section)
Product Dimensions (LxWxH)	5.12 x 2.76 x 1.28 in (130 x 70 x 35 mm)
Product Weight	10.83 ounces (307 grams)
Product Color	Jack Black
Compatibility	As a Universal KVM, all platforms are intended to be compatible if they can interface with both the DisplayPort™ Input and USB Input ports. Power Control, Host Power Status, and Host Power are available with the HP Z4/Z6/Z8 G4 and ZCentral 4R platforms when using the HP Z4/Z6/Z8 G4 / ZCentral 4R Remote System Controller Cable Adapter (7K6E5AA) and the Main Board Adapter (included in 7K6D7AA or sold separately as 7K6D8AA.[1,2] The Z2 G9 and Z4/Z6/Z8 G5 platforms and later all support full compatibility using the kit 7K6D7AA for the HP Remote System Controller.
Compatible Operating Systems	The HP Remote System Controller and accompanying HP Remote System Management software is compatible with all operating systems.
Power Supply	Power supply is only included with the HP Remote System Controller for Universal KVM (7K7N2AA) AMO kit, to provide power to the Remote System Controller when power from the host is not available: LiteOn AC to DC Adapter Model: PA-1041-81 Input: 100-240V AC, 50/60Hz 1.2A1 (Cord Length 6 feet or 1.83 meters) Output: 12.0V DC 3.33A (40.0W2) (Cord Length 4 feet or 1.2 meters)[3,4]
Operating Temperature	Max ambient temperature with AC adapter: 40°C Max ambient temperature without AC adapter: 50°C

[1]The latest BIOS update is required so the host provides power to the HP Integrated Remote System Controller in all host power states.

[2]By installing the HP Z4/Z6/Z8 G4 / ZCentral 4R Remote System Controller Cable Adapter (7K6E5AA), power will be stolen from the front USB ports on the host. This was necessary to be able to power the Remote System Controllers in all power states, and it leaves the front USB ports unpowered and unusable.

Introduction

[3]The AC power cord is localized to provide compatibility with most countries.
[4]The expected maximum wattage of the HP Remote System Controller is 18W with idle power expected in the 4-5W range.

Overview

HP Integrated Remote System Controller

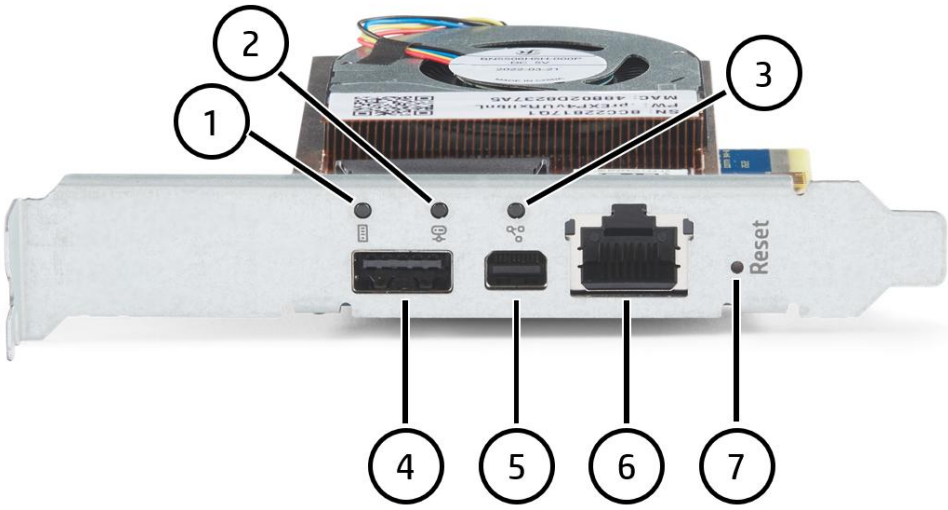

Front View

1. Host status LED
2. Remote System Controller status LED
3. Remote Connection status LED
4. USB for Mouse/Keyboard/Mass Storage Emulation[1]
5. Mini DisplayPort™ for graphics input
6. 1GbE Network for Remote Connection
7. Factory Reset Button

[1]The front USB Type-A port is not needed if the internal USB 3.0 connector (shown as #2 in Top View) is being used.

Overview

HP Integrated Remote System Controller

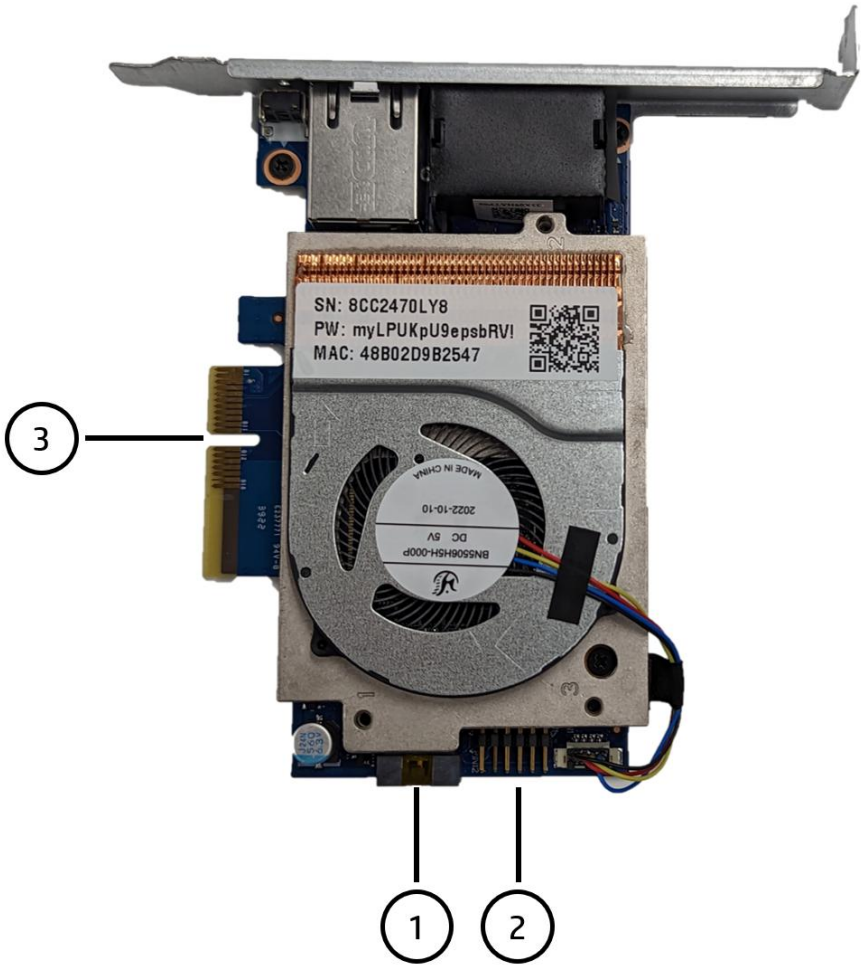

Top View

1. Power and Signal Interface (compatible with Z desktops only)
2. Internal USB 3.0 for Mouse/Keyboard/Mass Storage Emulation[1]
3. PCIe Connector[2]

[1]The internal USB 3.0 connector is not needed if the front USB Type-A port (shown as #4 in Front View) is being used.
[2]The function of the PCIe connector is purely electromechanical. No signal is passed over the PCIe bus and the host system will not recognize the HP Integrated Remote System Controller as a PCIe device.

HP Integrated Remote System Controller	
Product Part Numbers	7K6D9AA / 9B141AA (see HP Remote System Controller AMO and CTO Offerings section)
Product Dimensions (LxWxH)	4.41 x 2.76 x 0.79 in (112 x 72 x 20 mm)[1]
Product Weight	4.46 ounces (126.4 grams)[2]
Bus Type	PCI Express x4[3]
Compatibility	The HP Integrated Remote System Controller is fully compatible with the Z2 G9 and Z4/Z6/Z8 G5 platforms as well as the HP Engage Flex Pro G2 and HP Engage Flex Pro C G2. When using the HP Integrated Remote System Controller with the ZCentral 4R and Z4/Z6/Z8 G4 platforms, the HP Z4/Z6/Z8 G4 / ZCentral 4R Remote System Controller Cable Adapter (7K6E5AA) is required to supply auxiliary power to the HP Integrated Remote System Controller, as well as power control, and host power status.[4,5]

Overview

Compatible Operating Systems	The HP Integrated Remote System Controller and accompanying HP Remote System Management software is compatible with all operating systems.
Operating Temperature	Max ambient temperature: 55°C

[1]HP Remote System Controller only. Dimensions do not include PCIe bracket or cables.
[2]Weight does not include cables, half-height bracket, or packaging, and is only the HP Integrated Remote System Controller with the full-height PCIe bracket installed by default.
[3]The PCIe form factor is purely for power and mechanical retention. No host PCIe signals are used to communicate with the HP Integrated Remote System Controller as a PCIe device. It is compatible in any generation of PCIe slot as long as the card will physically fit.
[4]The latest BIOS update is required so the host provides power to the HP Integrated Remote System Controller in all host power states.
[5]By installing the HP Z4/Z6/Z8 G4 / ZCentral 4R Remote System Controller Cable Adapter (7K6E5AA), power will be stolen from the front USB ports on the host. This was necessary to be able to power the Remote System Controllers in all power states, and it leaves the front USB ports unpowered and unusable.

Comparison Between the Remote System Controller and Integrated Remote System Controller

HP Remote System Controller	HP Integrated Remote System Controller

• Sits external to the host device (no PCIe slot required)
• Full feature support with Z4, Z6, Z8, Z8 Fury G5 or beyond and Z2 Mini, Z2 Small Form Factor and Z2 Tower G9 or beyond
• Compatible with the Z2 Mini G9
• Not compatible with the HP Engage Flex Pro G2 and HP Engage Flex Pro C G2
• Supports passthrough ethernet
• Universal KVM compatibility with all computers (PC or Mac)
  ○ Requires external power supply when used with non-Z by HP Workstations
  ○ Standard USB and Mini DisplayPort™ recognized by any device
	• Sits internal to the host device (PCIe slot required)
	• Full feature support with Z4, Z6, Z8, Z8 Fury G5 or beyond and Z2 Small Form Factor and Z2 Tower G9 or beyond
	• Not compatible with the Z2 Mini G9
	• Compatible with the HP Engage Flex Pro G2 and HP Engage Flex Pro C G2
	• Does not support passthrough ethernet
	• Limited support as a universal KVM (not recommended for use with non-Z by HP Workstations)

Overview

After Market Option Kits

7K6D7AA - HP Remote System Controller



What's In the Box	• HP Remote System Controller • Main Board Adapter with DB9 adapter bracket • USB Type-A to Type-A cable (1 meter) • DisplayPort™ to Mini DisplayPort™ cable (1 meter) • CAT 5E ethernet cable (1 meter) • External Power and Signal Interface cable (1 meter) • Internal Power and Signal Interface cable (38 centimeters) • Quick Start Guide
For Use With	• HP Z4 Rack G5 • HP Z6A G5 • HP Z2 Tower G1i • HP Z2 Small Form Factor G1i • HP Z2 Small Form Factor G9 • HP Z2 Tower G9 • HP Z4 G5 • HP Z6 G5 • HP Z8 G5 • HP Z8 Fury G5 • HP Z4 G4, HP Z6 G4, HP Z8 G4, and HP ZCentral 4R with the addition of 7K6E5AA[1] • HP Z4 G6i • HP Z8 Fury G6i

[1]By installing the HP Z4/Z6/Z8 G4 / ZCentral 4R Remote System Controller Cable Adapter (7K6E5AA), power will be stolen from the front USB ports on the host. This was necessary to be able to power the Remote System Controllers in all power states, and it leaves the front USB ports unpowered and unusable.

Overview

7K7N2AA – HP Remote System Controller for Universal KVM



What's In the Box	• HP Remote System Controller • USB Type-A to Type-A cable (1 meter) • DisplayPort™ to Mini DisplayPort™ cable (1 meter) • CAT 5E ethernet cable (1 meter) • LiteOn AC to DC Adapter Model: PA-1041-81 • Quick Start Guide
For Use With	• Any non-Z by HP compute device • HP ZGX Nano explicitly • HP ZGX Fury G1n AI Station

Overview

7K6E4AA – HP Z2 Mini Remote System Controller



What's In the Box	• HP Remote System Controller • Main Board Adapter with Flex Port adapter bracket • USB Type-A to Type-A cable (30 centimeter) • DisplayPort™ to Mini DisplayPort™ cable (30 centimeter) • CAT 5E ethernet cable (30 centimeter) • Power and Signal 10pin RSC cables for Z2 Mini • Quick Start Guide
For Use With	• HP Z2 Mini G1a • HP Z2 Mini G1 I • HP Z2 Mini G9

Overview

7K6D9AA – HP Integrated Remote System Controller

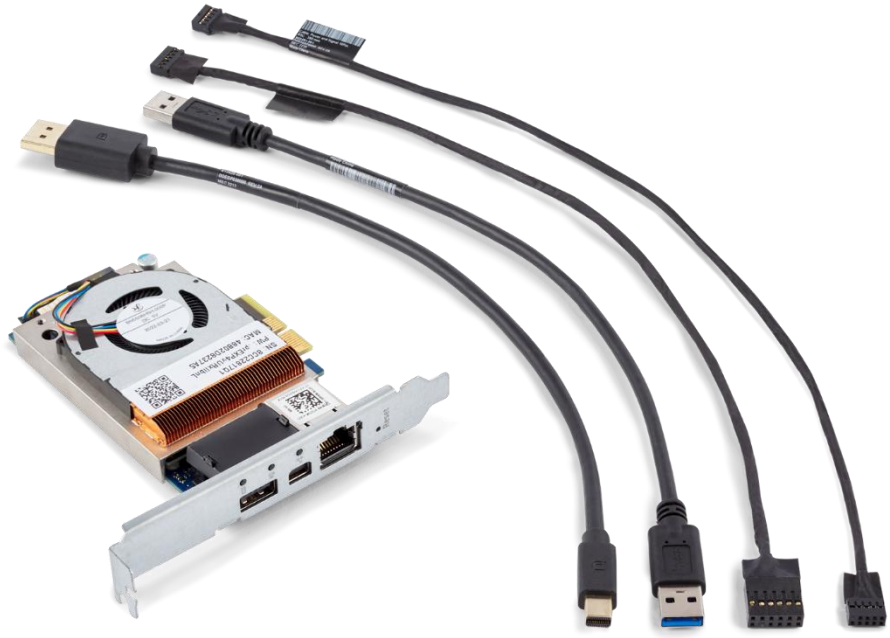

What's In the Box	• HP Integrated Remote System Controller with PCIe Half-Height Bracket and QR Code Label with unique identifiers and default password • External USB Type-A to Type-A cable (30 centimeters) • Internal USB cable (37 centimeters) • DisplayPort™ to Mini DisplayPort™ cable (30 centimeters) • Internal Power and Signal Interface cable (38 centimeters) • Quick Start Guide
For Use With	• HP Z4 Rack G5 • HP Z6A G5 • HP Z2 Tower G1i • HP Z2 Small Form Factor G1i • HP Z2 Small Form Factor G9 • HP Z2 Tower G9 • HP Z4 G5 • HP Z6 G5 • HP Z8 G5 • HP Z8 Fury G5 • HP Z4 G4, HP Z6 G4, HP Z8 G4, and HP ZCentral 4R with the addition of 7K6E5AA[1] • HP Z4 G6i • Z8 Fury G6i

[1]By installing the HP Z4/Z6/Z8 G4 / ZCentral 4R Remote System Controller Cable Adapter (7K6E5AA), power will be stolen from the front USB ports on the host. This was necessary to be able to power the Remote System Controllers in all power states, and it leaves the front USB ports unpowered and unusable.

Overview

9B141AA– HP Integrated Flex Pro Remote System Controller

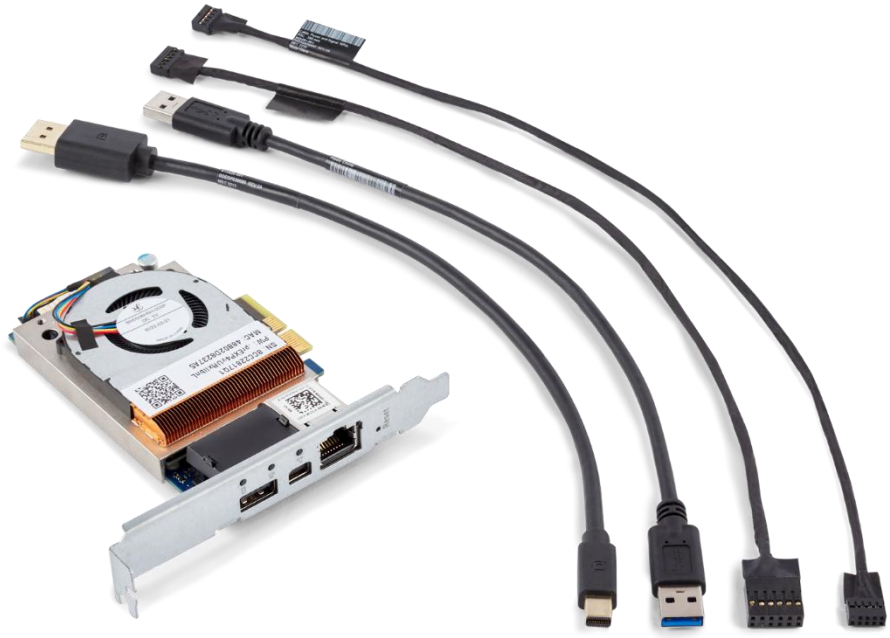

What's In the Box	• HP Integrated Remote System Controller with PCIe Half-Height Bracket and QR Code Label with unique identifiers and default password • External USB Type-A to Type-A cable (30 centimeters) • DisplayPort to Mini DisplayPort cable (30 centimeters) • Internal Power and Signal Interface cable (120 millimeters) • Quick Start Guide
For Use With	• HP Engage Flex Pro G2 • HP Engage Flex Pro C G2

Overview

7K6D8AA – HP Remote System Controller Main Board Adapter

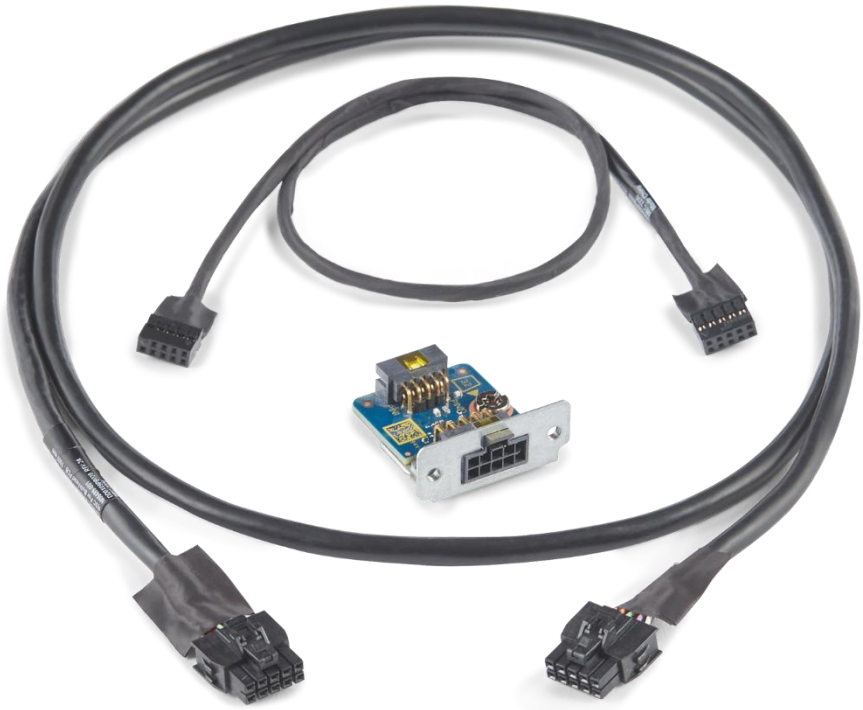

What's In the Box	• Main Board Adapter with DB9 adapter bracket[1] • External Power and Signal Interface cable (1 meter) • Internal Power and Signal Interface cable (38 centimeters)
For Use With	• HP Z4 Rack G5 • HP Z6A G5 • HP Z2 Tower G1i • HP Z2 Small Form Factor G1i • HP Z2 Small Form Factor G9 • HP Z2 Tower G9 • HP Z4 G5 • HP Z6 G5 • HP Z8 G5 • HP Z8 Fury G5 • HP Z4 G4, HP Z6 G4, HP Z8 G4, and HP ZCentral 4R with the addition of 7K6E5AA[2] • HP Z4 G6i • Z8 Fury G6i.

[1]Main Board Adapter max ambient temperature: 65°C.

[2]By installing the HP Z4/Z6/Z8 G4 / ZCentral 4R Remote System Controller Cable Adapter (7K6E5AA), power will be stolen from the front USB ports on the host. This was necessary to be able to power the Remote System Controllers in all power states, and it leaves the front USB ports unpowered and unusable.

Overview

7K6E5AA – HP Z4/Z6/Z8 G4 / ZCentral 4R Remote System Controller Cable Adapter



What's In the Box	• PCIe Full-Height Bracket for the Main Board Adapter • HP Z4/Z6/Z8 G4 / ZCentral 4R Remote System Controller Cable Adapter • Power and Signal 10pin RSC cable
For Use With[1,2]	• HP Z4 G4 • HP Z6 G4 • HP Z8 G4 • HP ZCentral 4R

[1]The latest BIOS update is required so the host provides power to the HP Integrated Remote System Controller in all host power states.

[2] By installing the HP Z4/Z6/Z8 G4 / ZCentral 4R Remote System Controller Cable Adapter, power will be stolen from the front USB ports on the host. This was necessary to be able to power the Remote System Controllers in all power states, and it leaves the front USB ports unpowered and unusable.

Manageability Features

The below list is a high-level summary of the manageability features that the HP (Integrated) Remote System Controller enables when paired with Z2 platforms G9 and beyond, and Z4, Z6, Z8, or Z8 Fury G5 and beyond. For an understanding of how these features differ when paired with other compute devices, see the "Feature Comparison by Platform" chart in the 'Technical Specifications' section. New features are consistently added to the HP (Integrated) Remote System Controller through either the embedded software or HP Remote System Management software (see 'Software Overview' section), so this list may not represent all of the capabilities.

- IP KVM Remote Console (including pre-boot access)
- Direct Communication with BIOS
- Power Button Control
- Hardware Alerts
- Hardware System Inventory
- BareMetal Imaging
- Firmware Updates
- Remote Virtual Storage
- Agentless Management

Introduction

There are three primary ways to interface with the HP Remote System Controller and HP Integrated Remote System Controller:

Overview

1. Embedded software
2. HP Remote System Management
3. Redfish® API

The following section will outline these three methods and give basic instructions. For further information, please seek out software specific user guides online.

Embedded Software

Each HP (Integrated) Remote System Controller has a web server that can be accessed directly from a web browser. This method of interfacing with the hardware is for managing one device at a time and can be viewed as containerized micro-services running on an Ubuntu 18.04 Linux Kernel.

To access the embedded software, it is required to be on the same network that the HP (Integrated) Remote System Controller is assigned to.

Instructions for Accessing the Embedded Software

1. Open a web browser. Any web browser will work, but the experience is optimized for Google Chrome.
2. Enter either the IP address or serial number for the HP (Integrated) Remote System Controller being accessed.
    a. For the HP Remote System Controller, the IP address will be displayed on the front LCD screen. The serial number can be found on the underside of the Remote System Controller.
    b. For the HP Integrated Remote System Controller, the serial number can be found on the sticker on the top side of the card.
3. Login to the embedded software using the default username “Admin” and the default password for the HP (Integrated) Remote System Controller.
    a. For the HP Remote System Controller, the password can be found on the underside of the Remote System Controller.
    b. For the HP Integrated Remote System Controller, the password can be found on the sticker on the top side of the card.
    NOTE: The password can be changed from the embedded software UI after the first login

HP Remote System Management

The HP Remote System Management is a, public-cloud software that enables fleet management from a single console.

Redfish® API

Redfish® is a communication protocol usually used for the management of servers. The HP (Integrated) Remote System Controller uses this same communication protocol so it can fit seamlessly within server environments and take advantage of many of the same software scripts that are used in server management. For more information, please seek out Redfish® API documentation online.

For more information, please visit DMTF’s Redfish® site:
https://www.dmtf.org/standards/redfish

HP Remote System Controller – Technical Specifications

System-on-Module (SoM)	NVIDIA® Jetson Nano
CPU	Quad-core ARM Cortex-A57 MPCore processor
GPU	NVIDIA® Maxwell with 128 NVIDIA® CUDA® cores
Memory	4GB 64-bit LPDDR4, 1600MHz 25.6 GB/s
Storage	16GB eMMC 5.1[1]
Upgradeable Storage	uSD Slot (SD4.0)[2]
Ethernet	10/100/1000Mbps (all ports)
mDP	Input 4096 × 2160 23 FPS [4]
USB	USB3.1G1 (5Gbps)
TPM	TPM2.0 SLB9672
Power	~4W (Idle)/~17W (Max)
Power Supply	Power supply is only included with the HP Remote System Controller for Universal KVM (7K7N2AA) AMO kit, to provide power to the Remote System Controller when power from the host is not available: LiteOn AC to DC Adapter Model: PA-1041-81 Input: 100-240V AC, 50/60Hz 1.2A1 (Cord Length 6 feet or 1.83 meters) Output: 12.0V DC 3.33A (40.0W2) (Cord Length 4 feet or 1.2 meters)[3]
Thermal	Active Cooling
Operating Temperature	Max ambient temperature with AC adapter: 40°C Max ambient temperature without AC adapter: 50°C

[1]Virtual Media storage capacity is 4.7GB.
[2]For later expandable storage.
[3]Used with the ATP 80GB Self Encrypting microSD Card or generic microSD cards starting with RSC firmware 26.08.0.
[4]The AC power cord is localized to provide compatibility with most countries.

HP Integrated Remote System Controller – Technical Specifications

System-on-Module (SoM)	NVIDIA® Jetson Nano
CPU	Quad-core ARM Cortex-A57 MPCore processor
GPU	NVIDIA® Maxwell with 128 NVIDIA® CUDA® cores
Memory	4GB 64-bit LPDDR4, 1600MHz 25.6 GB/s
Storage	16 GB eMMC 5.1[1]
Upgradeable Storage	uSD Slot (SD4.0)[2]
Ethernet	10/100/1000Mbps
mDP	Input 4096 × 2160 23 FPS[3]
USB	USB3.1G1 (5Gbps)
TPM	TPM2.0 SLB9672
Power	~4W (Idle)/~17W (Max)
Thermal	Active Cooling
Operating Temperature	Max ambient temperature: 55°C

[1]Virtual Media storage capacity is 4.7GB.
[2]For later expandable storage.
[3]Used with the ATP 80GB Self Encrypting microSD Card or generic microSD cards starting with RSC firmware 26.08.0.

Feature Comparison by Platform

Feature	Z4, Z6, Z8, Z8 Fury G5+ Z2 G9+	Z4, Z6, Z8 G4 ZCentral 4R[1]	Non-Z Compute Devices

Technical Specifications

	HP Engage Flex Pro G2 & Flex Pro C G2		
Power Button Control	●	●	
Direct Communication with BIOS	●		
BareMetal Imaging	●	Manual	Manual
Remote Virtual Storage	●	●	●
IP KVM[2]	●	●	●
HW System Inventory	●		
Hardware Alerts	●	Partial[3]	
HP (Integrated) Remote System Controller Firmware Updates	●	●	●

[1]By installing the HP Z4/Z6/Z8 G4 / ZCentral 4R Remote System Controller Cable Adapter (7K6E5AA), power will be stolen from the front USB ports on the host. This was necessary to be able to power the Remote System Controllers in all power states, and it leaves the front USB ports unpowered and unusable.
[2]IP KVM refers to the ability to remotely interface with the host machine with keyboard, monitor and mouse control over a network.
[3]By being able to communicate directly with the BIOS when paired with Z2 platforms G9 and beyond, or Z4, Z6, Z8, and Z8 Fury G5 and beyond, the HP (Integrated) Remote System Controller is able to reactively alert users of over 200 different hardware events. When paired with the Z4 G4, Z6 G4, Z8 G4, or ZCentral 4R, the hardware events that the HP (Integrated) Remote System Controller is able to detect is limited only to events that prevent the system from booting.

Port Information

- All communication is initiated over HTTPS (Port 443)
- KVM will look for high-speed outbound port candidates in the range of 1024-65535 with firmware versions before 24.02.0
- Starting with 24.02.0 the default KVM port range narrows to 3478-3481 (same ports that Microsoft Teams uses)
- With firmware 24.04.0 and later, the KVM port range can be user defined.
- The port range limits the number of KVM collaborators (e.g. collaborators <= number of ports in the range)

Security Features

- **Zero Trust Model**: All communication is over HTTPS with session-based tokens, multi-factor authentication, and secure web sockets.
- **Trusted Platform Module**: The HP (Integrated) Remote System Controller uses the same TPM 2.0 chip that Z by HP Desktop Workstations use. They are Common Criteria EAL4+ certified.
- **Full-Disk Encryption**: All data is encrypted at rest, using secure boot to ensure that only HP-signed bits can be loaded.
- **HP Labs Security Libraries**: The HP (Integrated) Remote System Controller and HP Remote System Management utilizes libraries developed by HP Labs to enable the highest level of encryption with redundancy and futureproofing.
- **Physical Security**: The HP Remote System Controller features a Kensington lock slot.

Service, Support, and Warranty

On-site Warranty and Service[1]: Warranty term is determined by the purchase path. When bundled CTO with a Z by HP Workstation or select HP Engage Retail System, the HP (Integrated) Remote System Controller will absorb the warranty of the Workstation. When purchased as an after market option, the HP (Integrated) Remote System Controller has a one-year, limited warranty. Service offering delivers on-site, next business-day[2] service for parts and labor and includes free telephone support[3] 8am - 5pm. Global coverage ensures that any product purchased in one country and transferred to another, non-restricted country will remain fully covered under the original warranty and service offering. 24/7 operation will not void the HP warranty.

Note 1: Terms and conditions may vary by country. Certain restrictions and exclusions apply

Note 2: On-site service may be provided pursuant to a service contract between HP and an authorized HP third-party provider, and is not available in certain countries. Global service response times are based on commercially reasonable best effort and may vary by country.

Note 3: Technical telephone support applies only to HP-configured, HP and HP-qualified, third-party hardware and software. Toll-free calling and 24x7 support service may not be available in some countries.

HP Care Pack Services extend service contracts beyond the standard warranties. Service starts from date of hardware purchase. To choose the right level of service for your HP product, use the HP Care Pack Services Lookup Tool at: http://www.hp.com/go/lookuptool. Service levels and response times for HP Care Packs may vary depending on your geographic location.

Certifications and Compliance

Environmental Sustainability questions concerning:

- Ecolabels (EPEAT, TCO, etc.)
- ENERGY STAR, California Energy Commission (CEC)
- Compliance with Environmental legislation (EU ErP, China CECP, EU RoHS, and other countries)
- Supply Chain Social Environmental Responsibility (SER) (conflict mineral; human rights, etc.)
- Product specific environmental features (material content, packaging content, recycled content, etc.)
- China Energy Label (CEL)

Please contact sustainability@hp.com
For country specific Regulatory Compliance approval documents or Regulatory and Safety questions concerning:

- Declarations of Conformity (for self-service, go to https://www.hp.com/uken/certifications/technical/regulations-certificates.html?jumpid=ex_r135_uk/en/any/corp/hpukmu_chev/certificates)
- GS Certificates
- Product Safety Certificates (UL, CB, BIS, etc.)
- EMC Certificates, Declarations of Conformity, or Certificates of Conformity (CE, FCC, ICES, etc.)
- CCC Certificates
- Ergonomics

Please contact techregshelp@hp.com

Date of change:	Version History:		Description of change:
January 1, 2024	From v1 to v2	Changed	Introduction, HP Remote System Controller AMO and CTO Offerings, HP Integrated Flex Pro Remote System Controller, Feature Comparison by Platform, Service, Support, and Warranty sections
April 1, 2024	From v2 to v3	Changed	Format
June 1, 2024	From v3 to v4	Added	Port Information section
July 21, 2025	From v4 to v5	Changed	HP Remote System Controller AMO and CTO Offerings section
July 2, 2026	From v5 to V6	Updated	AMO Offerings section, AMO Decoder by Platform section, For Use With section - 7K6D7AA, 7K7N2AA, 7K6D9AA, 7K6D8AA, and Technical Specification section (HP Remote System Controller and HP Integrated Remote System Controller)
November 10, 2026	From v6 to v7	Updated	HP ZGX Fury addede to kit sections for HP Remote System Controller for Universal KVM

© 2026 HP Development Company, L.P. The information contained herein is subject to change without notice. The only warranties for HP products and services are set forth in the express warranty statements accompanying such products and services. Nothing herein should be construed as constituting an additional warranty. HP shall not be liable for technical or editorial errors or omissions contained herein. NVIDIA and the NVIDIA logo are trademarks and/or registered trademarks of NVIDIA Corporation in the U.S. and other countries. SD is a trademark or registered trademark of SD-3C in the United States, other countries, or both. DisplayPort™ and the DisplayPort™ logo are trademarks owned by the Video Electronics Standards Association (VESA®) in the United States and other countries. USB Type-C® and USB-C® are trademarks of USB Implementers Forum.